Složeno naprezanje
Vežbe 6

Za nosač tankozidnog poprečnog preseka na slici:
a/ nacrtati dijagrame presečnih sila,
b/ za presek u uklještenju nacrtati dijagrame komponentalnih napona,
c/ analizirati stanje napona u tački A.

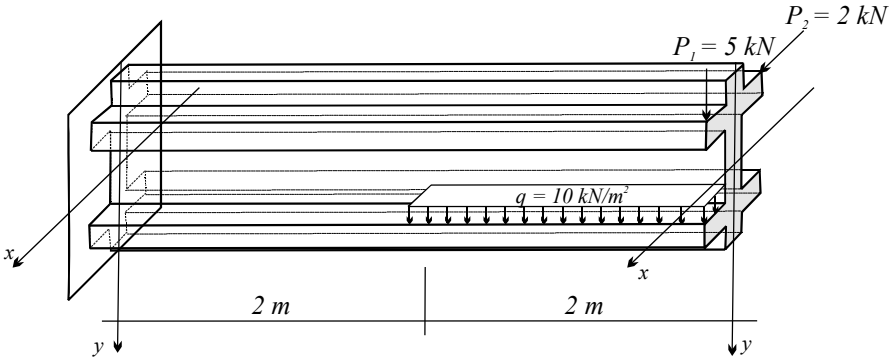

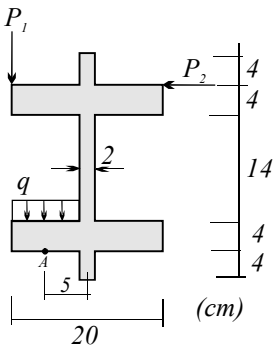

Rešenje:

a/ Dijagrami presečnih sila:

Postupak redukcije opterećenja na težišnu osu.

Površinsko opterećenje $q = 10\ kN/m^2$

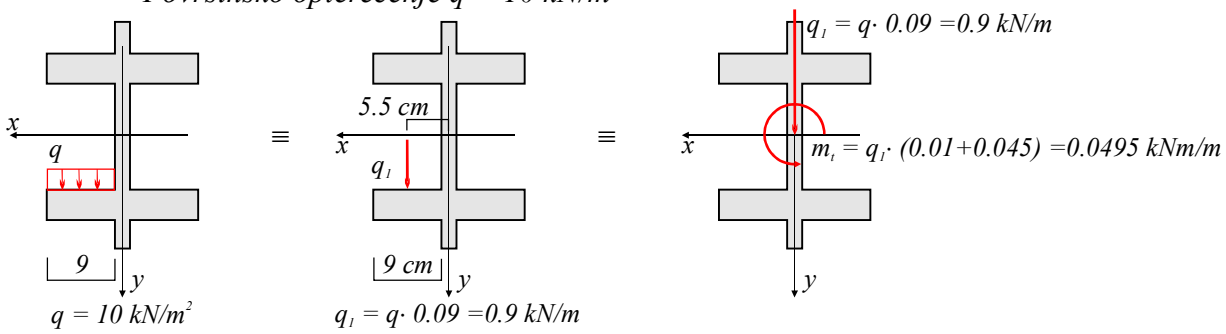

Koncentrisana sila $P_1 = 5\ kN$

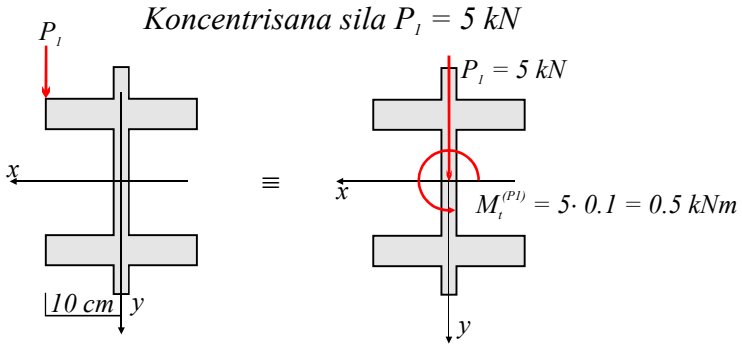

Koncentrisana sila $P_2 = 2\ kN$

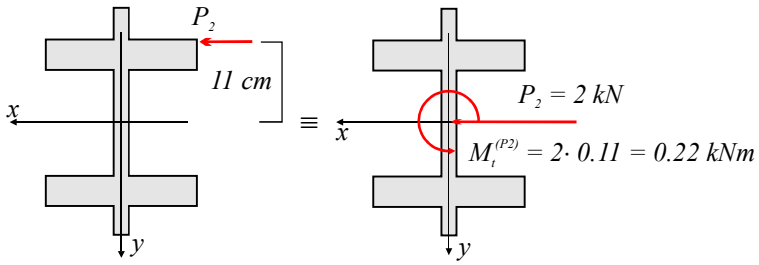

Ekvivalentno opterećenje redukovano na težišnu osu nosača

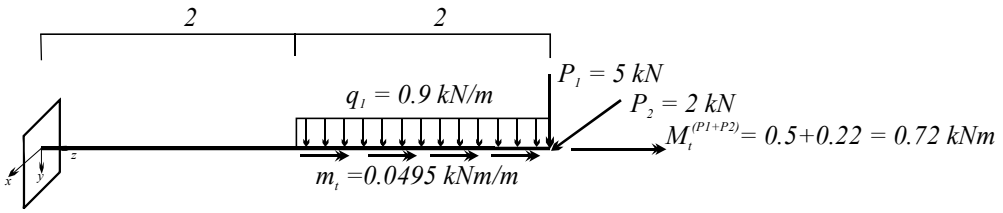

Dijagrami presečnih sila

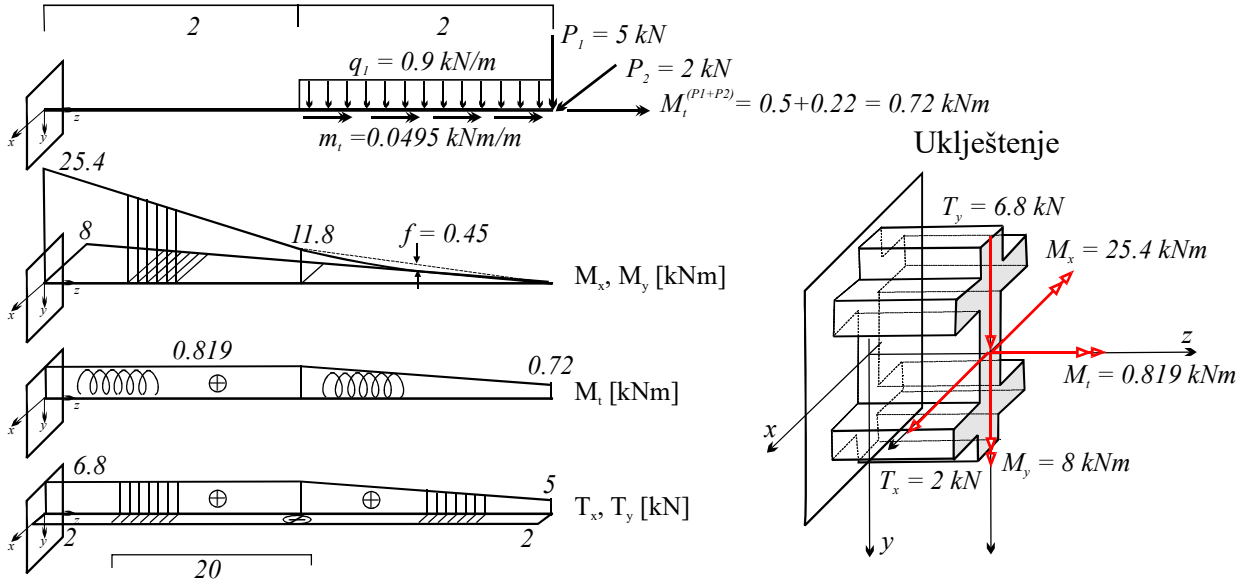

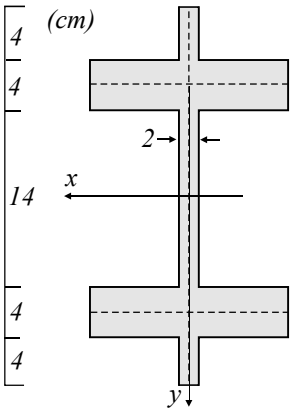

Geometrijske karakteristike preseka

Momenti inercije (I_x ,I_y i I_t)

$$I_x = \frac{1}{12} 2\cdot 30^3 + 4\left(\frac{1}{12} 9\cdot 4^3 + 36\cdot 9^2\right) = 16356\ cm^4$$

$$W_x = I_x / 15 = 1090.4\ cm^3$$

$$I_y = \frac{1}{12} 30\cdot 2^3 + 4\left(\frac{1}{12} 4\cdot 9^3 + 36\cdot 5.5^2\right) = 5348\ cm^4$$

$$W_y = I_y / 10 = 534.8\ cm^3$$

$$I_t = \frac{1}{3} \sum_i h_i t_i^3 = \frac{1}{3} (30\cdot 2^3 + 4\cdot 10\cdot 4^3) = 933.33\ cm^4$$

Statički momenti (S_x i S_y)

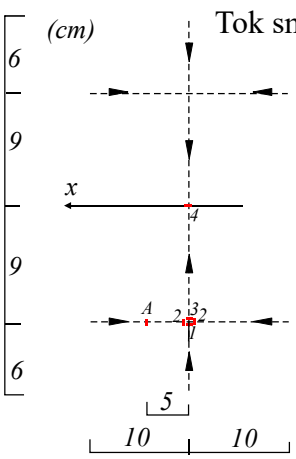

Tok smicanja

$$S_x^{(1)} = 6\cdot 2\ (9+3) = 144\ cm^3$$

$$S_x^{(A)} = 5\cdot 4\cdot 9 = 180\ cm^3$$

$$S_x^{(2)} = 10\cdot 4\cdot 9 = 360\ cm^3$$

$$S_x^{(3)} = S_x^{(1)} + 2\cdot S_x^{(2)} = 864\ cm^3$$

$$S_x^{(4)} = S_x^{(3)} + 2\cdot 9\cdot \frac{9}{2} = 945\ cm^3$$

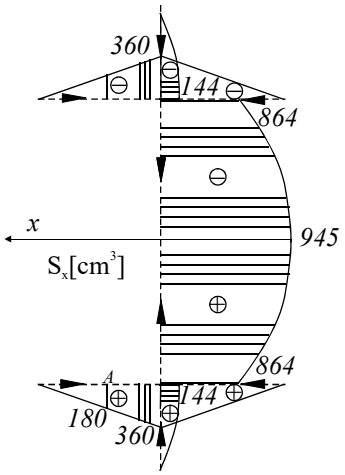

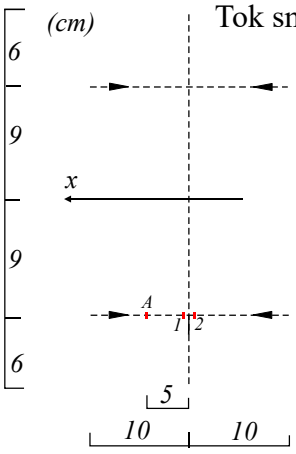

Tok smicanja

$$S_y^{(1)} = 10\cdot 4\ \frac{10}{2} = 200\ cm^3$$

$$S_y^{(A)} = 5\cdot 4\cdot 7.5 = 150\ cm^3$$

$$S_y^{(2)} = 10\cdot 4\cdot \left(-\frac{10}{2}\right) = -200\ cm^3$$

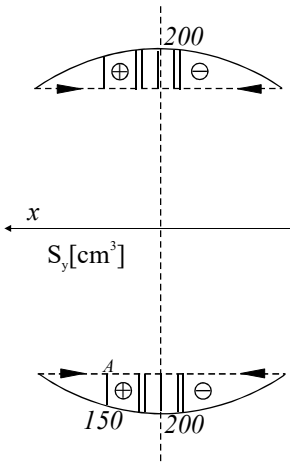

Vrednosti komponentalnih napona

Normalni naponi

Normalni naponi usled delovanja momenata savijanja M_x (M_x = 25.4 kNm) i M_y (M_y = 8 kNm):

$$\sigma_z^{(Mx)} = \pm \frac{M_x}{W_x} = \pm \frac{25.4 \cdot 10^2}{1090.4} = \pm 2.33 \ kN/cm^2$$

$$\sigma_z^{(My)} = \pm \frac{M_y}{W_y} = \pm \frac{8 \cdot 10^2}{534.8} = \pm 1.496 \ kN/cm^2$$

Komponente normalnog napona od momenata savijanja u tački A (y_A = 11 cm i x_A = 5 cm). Pri određivanju vrednosti uvedena konvencija o znaku momenta savijanja.

$$\sigma_{z(A)}^{(Mx)} = \frac{M_x}{I_x} y_A = \frac{(-25.4) \cdot 10^2}{16356} 11 = -1.708 \ kN/cm^2$$

$$\sigma_{z(A)}^{(My)} = \frac{M_y}{I_y} x_A = \frac{(-8) \cdot 10^2}{5348} 5 = -0.748 \ kN/cm^2$$

Tangencijalnii naponi

Smičući napon usled delovanja transverzalne sile T_y (T_y = + 6.8 kN):

$$\tau_{z(Ty)}^{(1)} = -\frac{T_y \cdot S_x^{(1)}}{b^{(1)} \cdot I_x} = -\frac{6.8 \cdot 144}{2 \cdot 16356} = -0.0299 \ kN/cm^2$$

$$\tau_{z(Ty)}^{(2)} = -\frac{T_y \cdot S_x^{(2)}}{b^{(2)} \cdot I_x} = -\frac{6.8 \cdot 360}{4 \cdot 16356} = -0.0374 \ kN/cm^2$$

$$\tau_{z(Ty)}^{(A)} = -\frac{T_y \cdot S_x^{(A)}}{b^{(A)} \cdot I_x} = -\frac{6.8 \cdot 180}{4 \cdot 16356} = -0.0187 \ kN/cm^2$$

$$\tau_{z(Ty)}^{(3)} = -\frac{T_y \cdot S_x^{(3)}}{b^{(3)} \cdot I_x} = -\frac{6.8 \cdot 864}{2 \cdot 16356} = -0.1796 \ kN/cm^2$$

$$\tau_{z(Ty)}^{(4)} = -\frac{T_y \cdot S_x^{(4)}}{b^{(4)} \cdot I_x} = -\frac{6.8 \cdot 945}{2 \cdot 16356} = -0.1964 \ kN/cm^2$$

Smičući napon usled delovanja transverzalne sile T_x (T_x = + 2 kN):

$$\tau_{z(Tx)}^{(1)} = -\frac{T_x \cdot S_y^{(1)}}{b^{(1)} \cdot I_y} = -\frac{2 \cdot 200}{4 \cdot 5348} = -0.0187 \ kN/cm^2$$

$$\tau_{z(Tx)}^{(2)} = -\frac{T_x \cdot S_y^{(2)}}{b^{(2)} \cdot I_y} = -\frac{2 \cdot (-200)}{4 \cdot 5348} = 0.0187 \ kN/cm^2$$

$$\tau_{z(Tx)}^{(A)} = -\frac{T_x \cdot S_y^{(A)}}{b^{(A)} \cdot I_y} = -\frac{2 \cdot 150}{4 \cdot 5348} = -0.0140 \ kN/cm^2$$

Smičući napon usled delovanja momenta torzije M_t (M_t = 0.819 kNm):

$$\tau_{z(Mt)}^{(1)} = \frac{M_t}{I_t} t_1 = \frac{0.819 \cdot 10^2}{933.33} 4 = 0.3510 \ kN/cm^2$$

$$\tau_{z(Mt)}^{(2)} = \frac{M_t}{I_t} t_2 = \frac{0.819 \cdot 10^2}{933.33} 2 = 0.1755 \ kN/cm^2$$

Dijagrami komponentalnih napona

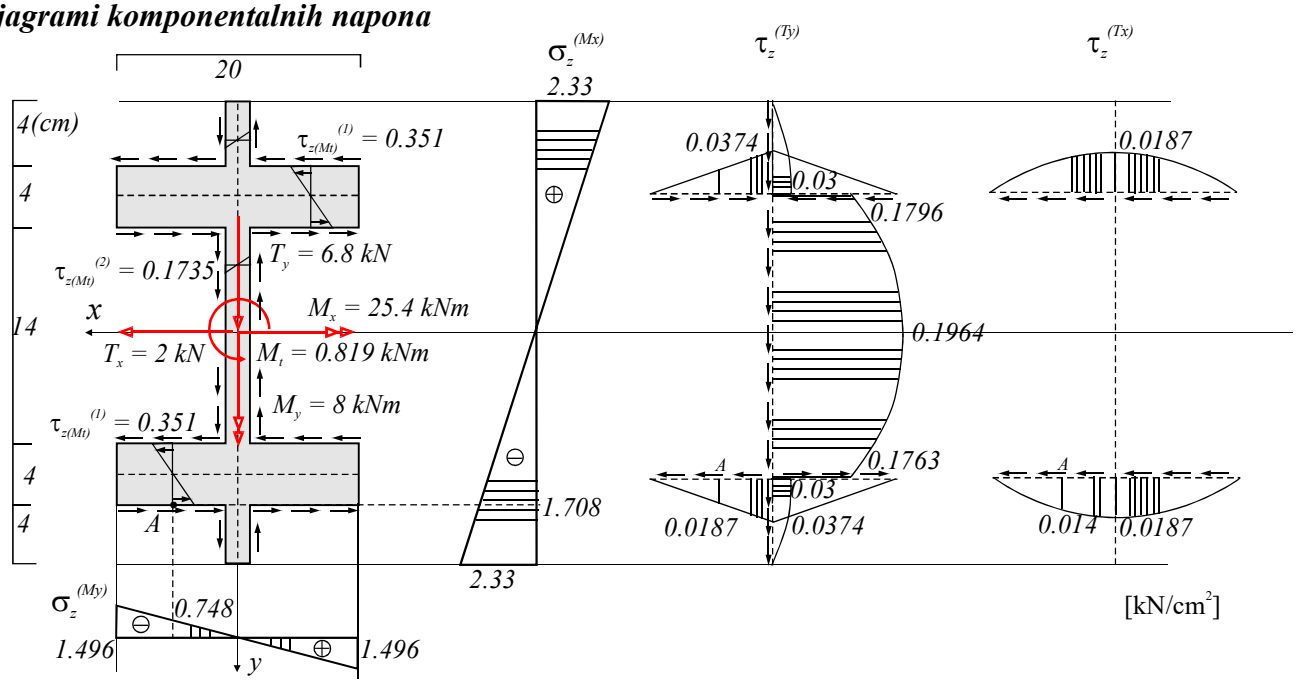

Analiza napona u tački A

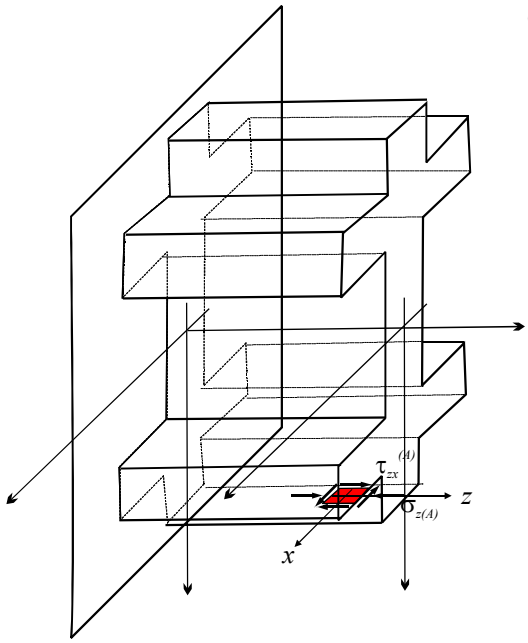

Normalni napon u tački A

$$\sigma_{z(A)} = \sigma_{z(A)}^{(Mx)} + \sigma_{z(A)}^{(My)} = -1.708 - 0.748 = -2.456\ kN/cm^2$$

Tangencijalni napon u tački A

$$\tau_{zx}^{(A)} = \tau_{zx(Tx)}^{(A)} + \tau_{zx(Ty)}^{(A)} + \tau_{zx(Mt)}^{(A)} =$$
$$= 0.014 + 0.0187 - 0.351 = -0.3183\ kN/cm^2$$

Ulazni podaci pri analizi napona u tački A

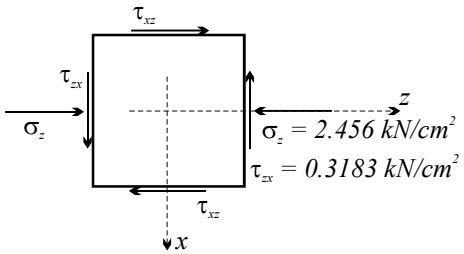

Glavni naponi i glavni pravci:

$$\sigma_{1/2} = 0.5\,(\sigma_x + \sigma_z) \pm 0.5\sqrt{(\sigma_x - \sigma_z)^2 + 4\tau_{xz}^2}$$

$$\sigma_{1/2} = 0.5(0 - 2.456) \pm 0.5\sqrt{(0 + 2.453)^2 + 4\cdot(-0.3183)^2} = -1.228 \pm 1.267$$

$$\sigma_1 = 0.039\ kN/cm^2$$
$$\sigma_2 = -2.495\ kN/cm^2$$

Pravci glavnih napona definisani su uglom α:

$$tg2\alpha = \frac{2\tau_{xz}}{\sigma_x - \sigma_z} = \frac{2\cdot(-0.3183)}{0 - (-2.453)} = -0.2595$$

za $(\sigma_x - \sigma_z) > 0$ $\quad \alpha = 0.5arctg\left(\frac{2\tau_{xz}}{\sigma_x - \sigma_z}\right)$

$$\alpha = 0.5arctg\,(-0.2595) = -7.274^o$$

Napregnuti element u sistemu glavnih osa

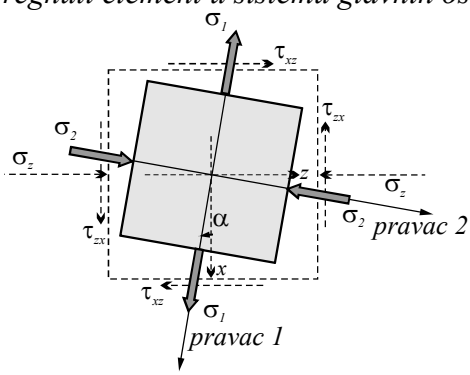

Za nosač punog poprečnog preseka kao na slici:
a/ nacrtati dijagrame prese~nih sila (M, N, T),
c/ za presek u 1-1 nacrtati dijagrame komponentalnih napona i analizirati stanje napona u tački A.

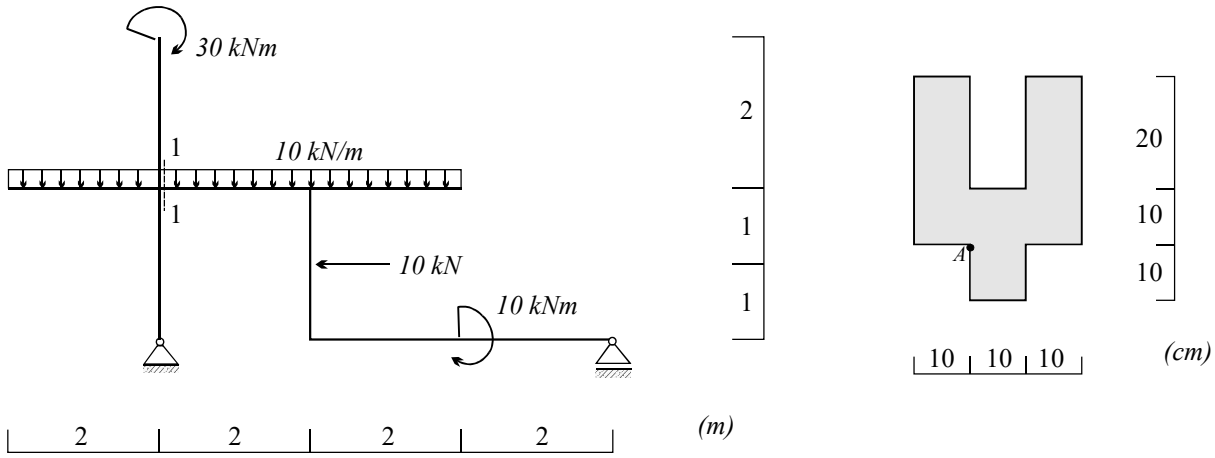

Rešenje:

a/ Dijagrami presečnih sila (smatra se da određivanje reakcija nosača u ravni nije potrebno detaljno prikazivati).

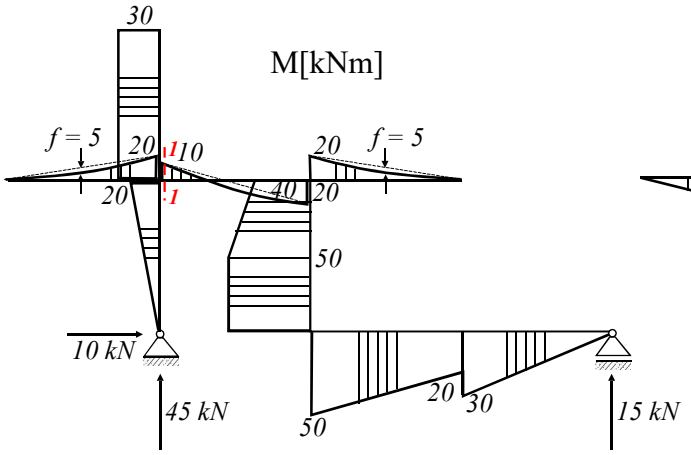

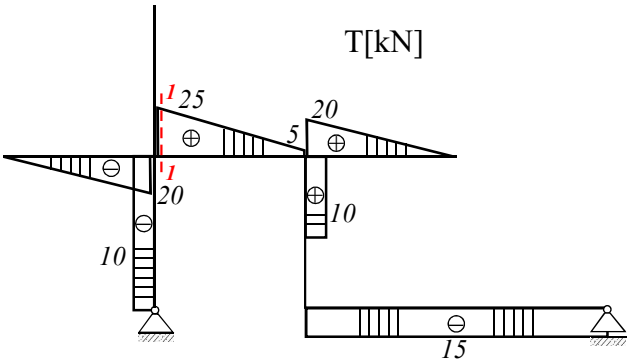

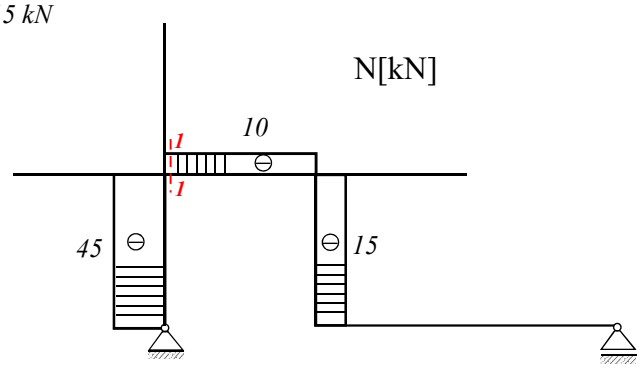

Uticaji u preseku 1-1

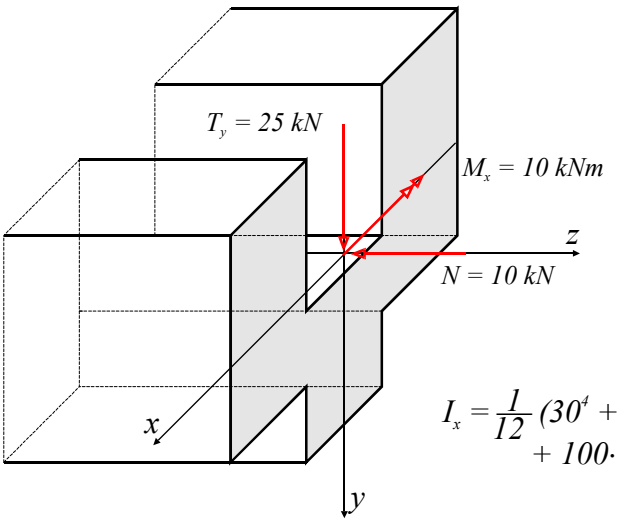

Geometrijske karakteristike preseka

Težište

$$y_c = \frac{900\cdot 15 + 100\cdot 35 - 200\cdot 10}{800} = 18.75\ cm$$

Moment inercije u odnosu na x osu

$$I_x = \frac{1}{12}(30^4 + 10^4 - 10\cdot 20^3) + 900\cdot 3.75^2 + 100\cdot 16.25^2 - 200\cdot 8.75^2 = 85416.67\ cm^4$$

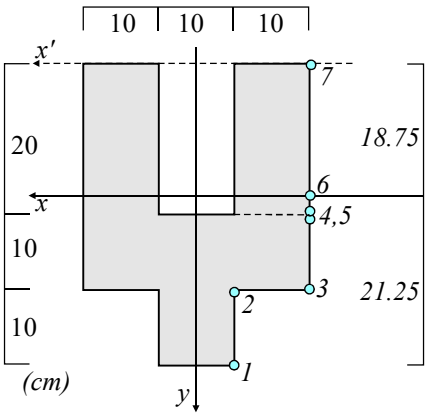

Statički moment

$$S_x^{(1)} = 0$$

$$S_x^{(2)} = S_x^{(3)} = 10\cdot 10\cdot 16.25 = 1625\ cm^3$$

$$S_x^{(4)} = S_x^{(5)} = S_x^{(3)} + 10\cdot 30\cdot 6.25 = 3500\ cm^3$$

$$S_x^{(6)} = S_x^{(5)} + 2\cdot 10\cdot 1.25\cdot \frac{1.25}{2} = 3515.625\ cm^3$$

Kontrola

$$S_x^{(7)} = S_x^{(6)} - 2\cdot 10\cdot 18.75\cdot \frac{18.75}{2} = 0$$

Normalni naponi

Normalni naponi usled delovanja momenata savijanja M_x.

Konvencija o znaku momenta savijanja pri određivanju intenziteta normalnog napona.

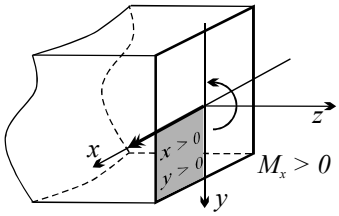

Moment je pozitivan ako zateže kvadrant koji je usvojen kao prvi x > 0, y > 0.

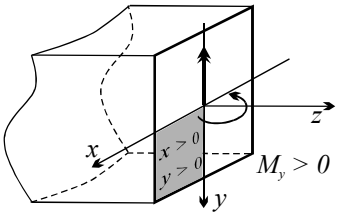

U ovom konkretnom slučaju moment M_x vrši pritisak na usvojeni prvi kvadrant zbog čega se u proračun uvodi sa negativnim predznakom (M_x = -10 kNm).

$$\sigma_{z(1)}^{(Mx)} = \frac{M_x}{I_x}\, y_1 = \frac{(-10.0)\cdot 10^2}{85416.67}\, 21.25 = -\ 0.249\ kN/cm^2$$

$$\sigma_{z(A)}^{(Mx)} = \frac{M_x}{I_x}\, y_A = \frac{(-10.0)\cdot 10^2}{85416.67}\, 11.25 = -\ 0.132\ kN/cm^2$$

$$\sigma_{z(7)}^{(Mx)} = \frac{M_x}{I_x}\, y_7 = \frac{(-10.0)\cdot 10^2}{85416.67}(-\ 18.75) = 0.2195\ kN/cm^2$$

Normalni naponi usled delovanja aksijalne sile pritiska N.

$$\sigma_z^{(N)} = \frac{N}{A} = \frac{-10}{800} = -\ 0.0125\ kN/cm^2$$

Tangencijalni napon usled delovanja transverzalne sile T_y (T_y = 25 kN):

$$\tau_{zy}^{(1)} = 0 \quad i \quad \tau_{zy}^{(7)} = 0$$

$$\tau_{zy}^{(2)} = \frac{T\cdot S_x^{(2)}}{b^{(2)}\cdot I_x} = \frac{25\cdot 1625}{10\cdot 85416.67} = 0.0476\ kN/cm^2 = \tau_{zy}^{(A)}$$

$$\tau_{zy}^{(3)} = \frac{T\cdot S_x^{(3)}}{b^{(3)}\cdot I_x} = \frac{25\cdot 1625}{30\cdot 85416.67} = 0.0158\ kN/cm^2$$

$$\tau_{zy}^{(4)} = \frac{T\cdot S_x^{(4)}}{b^{(4)}\cdot I_x} = \frac{25\cdot 3500}{30\cdot 85416.67} = 0.0341\ kN/cm^2$$

$$\tau_{zy}^{(5)} = \frac{T\cdot S_x^{(5)}}{b^{(5)}\cdot I_x} = \frac{25\cdot 3500}{20\cdot 85416.67} = 0.0512\ kN/cm^2$$

$$\tau_{zy}^{(6)} = \frac{T\cdot S_x^{(6)}}{b^{(6)}\cdot I_x} = \frac{25\cdot 3515.625}{20\cdot 85416.67} = 0.514\ kN/cm^2$$

Dijagrami komponentalnih napona

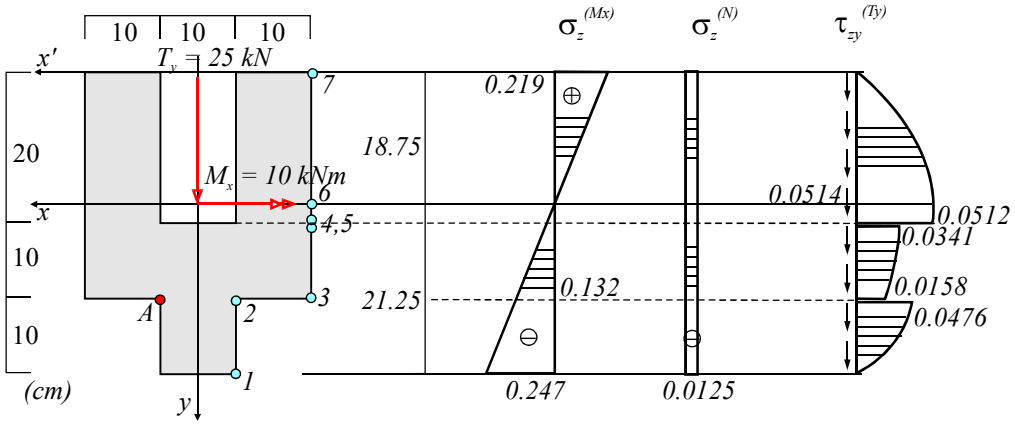

Analiza napona u tački A

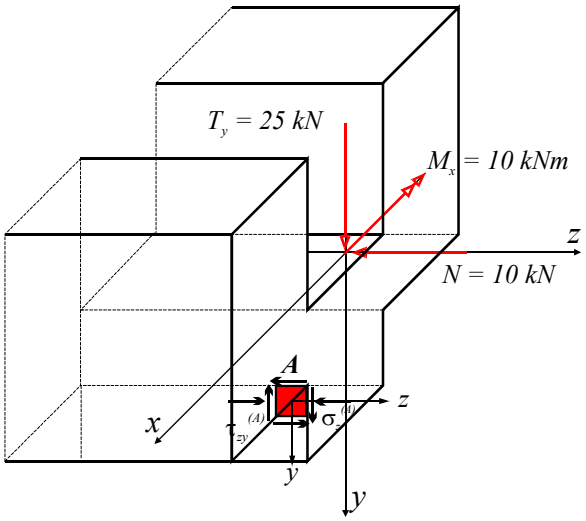

Normalni napon u tački A

$$\sigma_{z(A)} = \sigma_{z(A)}^{(Mx)} + \sigma_{z(A)}^{(N)} = -0.132 - 0.0125$$

$$\sigma_{z(A)} = -0.1445\ kN/cm^2$$

Tangencijalni napon u tački A

$$\tau_{zy}^{(A)} = \tau_{zy(Ty)}^{(A)} = 0.0476\ kN/cm^2$$

Ulazni podaci pri analizi napona u tački A

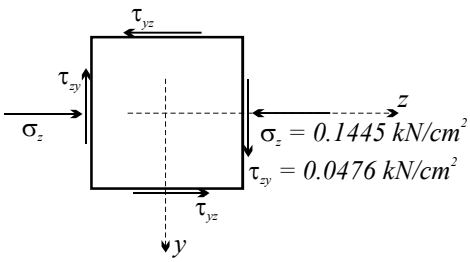

Glavni naponi i glavni pravci:

$$\sigma_{1/2} = 0.5\,(\sigma_y + \sigma_z) \pm 0.5\sqrt{(\sigma_y - \sigma_z)^2 + 4\tau_{yz}^2}$$

$$\sigma_{1/2} = 0.5(0 - 0.1445) \pm 0.5\sqrt{(0 + 0.1445)^2 + 4\cdot 0.0476^2} = -0.07225 \pm 0.08652$$

$$\sigma_1 = 0.0143\ kN/cm^2$$

$$\sigma_2 = -0.1588\ kN/cm^2$$

Pravci glavnih napona definisani su uglom α:

$$tg2\alpha = \frac{2\tau_{yz}}{\sigma_y - \sigma_z} = \frac{2\cdot 0.0476}{0 + 0.1445} = 0.659$$

za $(\sigma_y - \sigma_z) > 0$ $\quad \alpha = 0.5arctg\left(\frac{2\tau_{yz}}{\sigma_y - \sigma_z}\right)$

$$\alpha = 0.5arctg\,(0.659) = 16.69^o$$

Napregnuti element u sistemu glavnih osa

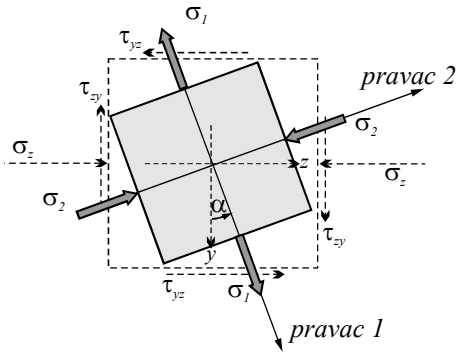

Za nosač kao na slici:
a/ nacrtati dijagrame presečnih sila (M, N, T),
b/ za presek u ujlještenju nacrtati dijagrame komponentalnih napona,
c/ za tačku A

- *napisati tenzor napona i deformacije (E=20 GPa, ν= 0.3),*
- *izvršiti analizu napona,*
- *izračunati vrednost glavnih dilatacija.*

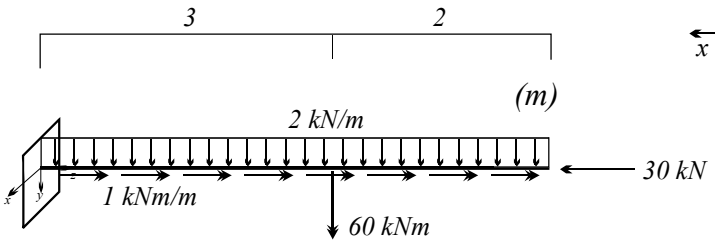

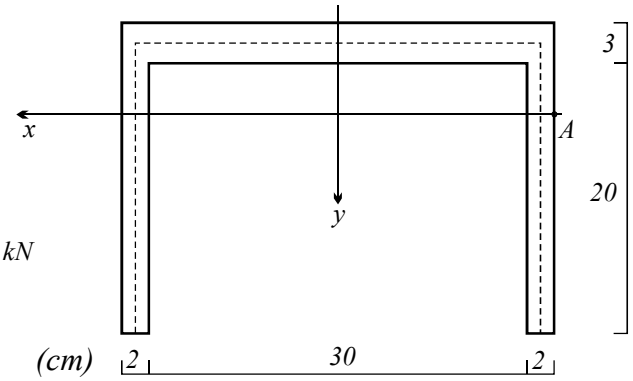

Rešenje:

a/ Dijagrami presečnih sila

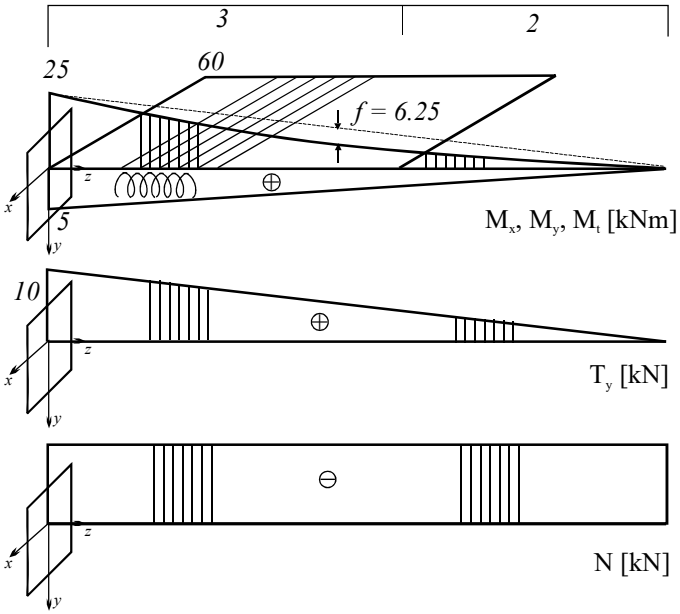

Uklještenje

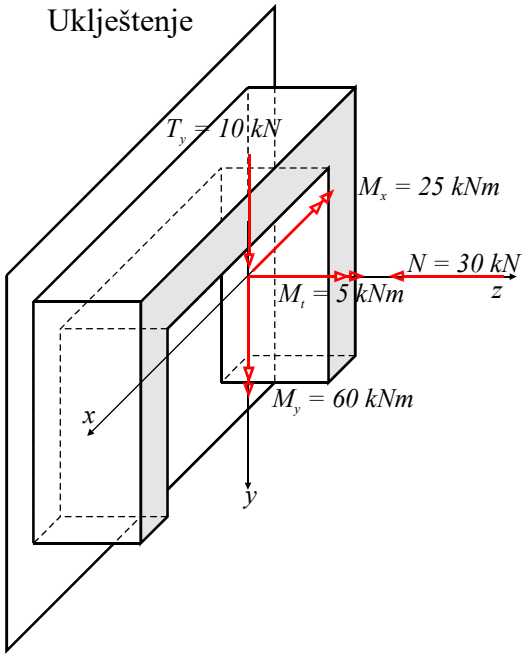

Geometrijske karakteristike preseka

$A = 34\cdot 23 - 30\cdot 20 = 182\ cm^2$

Težište

$$y_c = \frac{782\cdot 11.5 - 600\cdot 13}{182} = 6.555\ cm$$

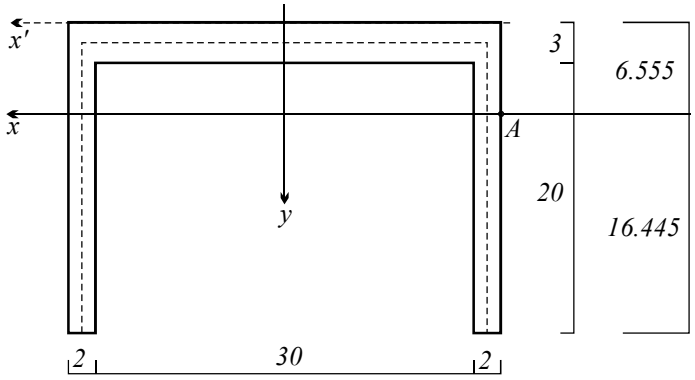

Momenti inercije

$$I_x = \frac{1}{12}(34\cdot 23^3 - 30\cdot 20^3) + 782\cdot 4.945^2 - 600\cdot 6.445^2 = 8672.63\ cm^4$$

$$I_y = \frac{1}{12}(23\cdot 34^3 - 20\cdot 30^3) = 30332.67\ cm^4$$

$$W_y = I_y/17 = 1784.27\ cm_3$$

$$I_t = \frac{1}{3}\sum_i h_i t_i^3 = \frac{1}{3}(32\cdot 3^3 + 2\cdot 21.5\cdot 2^3)$$

$$I_t = 402.67\ cm^4$$

Statički momenti S_x

Tok smicanja

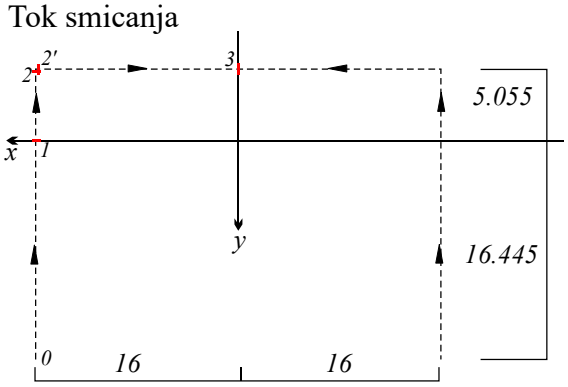

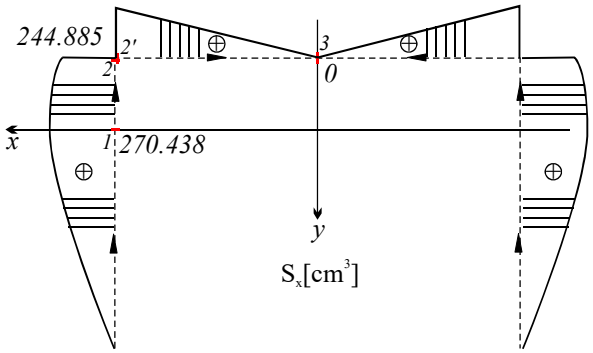

$$S_x^{(0)} = 0$$

$$S_x^{(1)} = 16.445 \cdot 2 \cdot \frac{16.445}{2} = 270.438\ cm^3 = \boldsymbol{S_x^{(A)}}$$

$$S_x^{(2)} = S_x^{(2')} = S_x^{(1)} - 5.055 \cdot 2 \cdot \frac{5.055}{2} = 244.885\ cm^3$$

Kontrola $\quad S_x^{(3)} = S_x^{(2)} - 3 \cdot 16 \cdot 5.055 = 244.885 - 242.640 = 2.245 \neq 0$

$$S_x^{(3)} = 0$$

U tački 3 statički moment bi trebao biti jednak nuli, ali zbog razlike u postupku određivanja težišta u slučaju punih i tankozidnih preseka pojavljuje se odstupanje. <u>S obzirom da se težište neće određivati posebno po principu tankozidnih preseka, nastala razlika se zanemaruje i u tački 3 se usvaja nulta vrednost statičkog momenta.</u> U nastavku objašnjen je razlog nastanka ove razlike, koja u slučaju većeg razmimoilaženja u vrednostima težišta, može biti i izraženija.

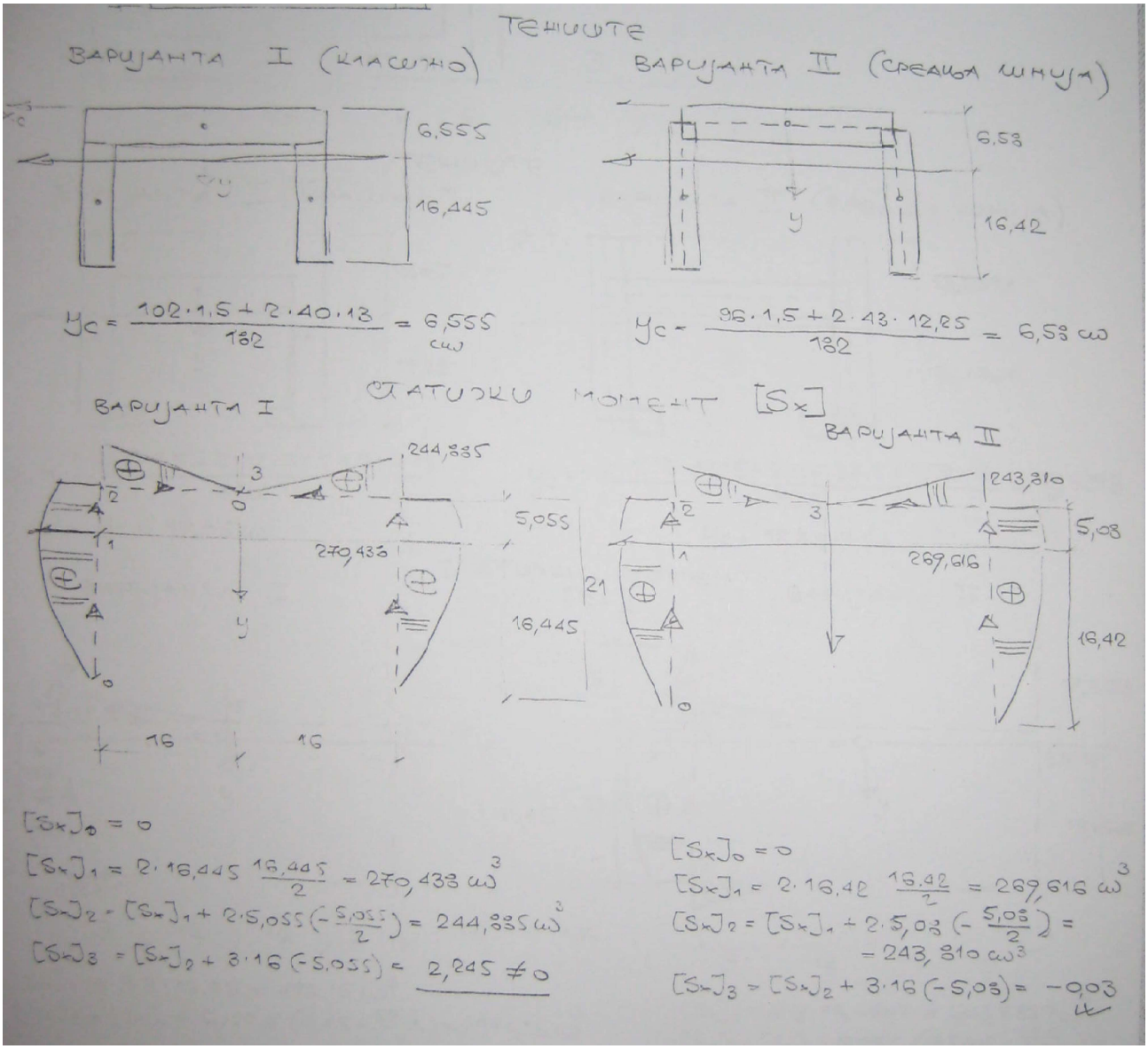

Vrednosti komponentalnih napona

Normalni naponi

Normalni naponi usled delovanja momenata savijanja M_x (M_x = 25 kNm) i M_y (M_y = 60 kNm):

$$\sigma_{z(0)}^{(Mx)} = \frac{M_x}{I_x}\, y_0 = \frac{(-25.0)\cdot 10^2}{8672.63}\, 16.445 = -\,4.740\ kN/cm^2$$

$$\sigma_{z(2)}^{(Mx)} = \frac{M_x}{I_x}\, y_2 = \frac{(-25.0)\cdot 10^2}{8672.63}(-\,6.555) = 1.890\ kN/cm^2$$

$$\sigma_z^{(My)} = \pm\frac{M_y}{W_y} = \pm\frac{60\cdot 10^2}{1784.27} = \pm\,3.363\ kN/cm^2$$

Normalni naponi usled delovanja aksijalne sile pritiska N.

$$\sigma_z^{(N)} = \frac{N}{A} = \frac{-30}{182} = -\,0.165\ kN/cm^2$$

Tangencijalnii naponi

Smičući napon usled delovanja transverzalne sile T_y (T_y = + 10 kN):

$$\tau_{z(Ty)}^{(1)} = -\frac{T_y\cdot S_x^{(1)}}{b^{(1)}\cdot I_x} = -\frac{10\cdot 270.438}{2\cdot 8672.63} = -\,0.156\ kN/cm^2 = \tau_{z(Ty)}^{(A)}$$

$$\tau_{z(Ty)}^{(2)} = -\frac{T_y\cdot S_x^{(2)}}{b^{(2)}\cdot I_x} = -\frac{10\cdot 244.885}{2\cdot 8672.63} = -\,0.141\ kN/cm^2$$

$$\tau_{z(Ty)}^{(2')} = -\frac{T_y\cdot S_x^{(2)}}{b^{(2')}\cdot I_x} = -\frac{10\cdot 244.885}{3\cdot 8672.63} = -\,0.094\ kN/cm^2$$

$$\tau_{z(Ty)}^{(3)} = 0$$

Smičući napon usled delovanja momenta torzije M_t (M_t = 0.819 kNm):

$$\tau_{z(Mt)}^{(1)} = \frac{M_t}{I_t}\, t_1 = \frac{5.0\cdot 10^2}{402.67}\, 2 = 2.483\ kN/cm^2$$

$$\tau_{z(Mt)}^{(2)} = \frac{M_t}{I_t}\, t_2 = \frac{5.0\cdot 10^2}{402.67}\, 3 = 3.725\ kN/cm^2$$

Dijagrami komponentalnih napona

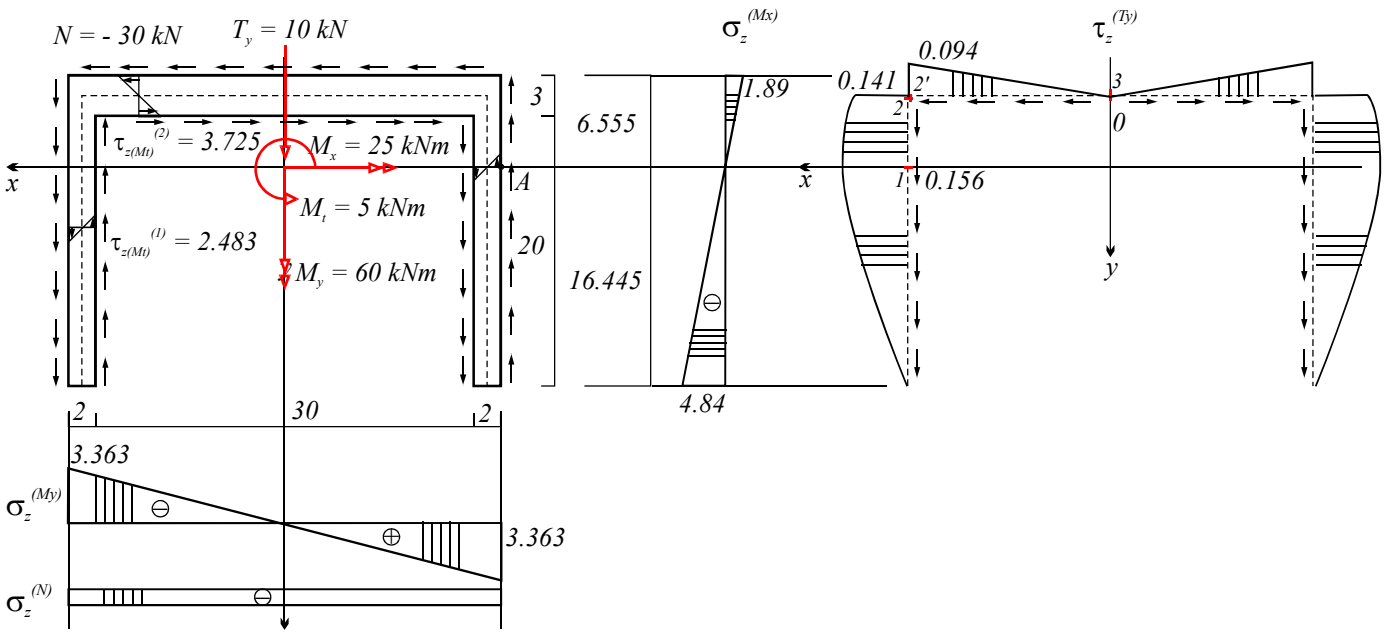

Tenzori napona i deformacije u tački A

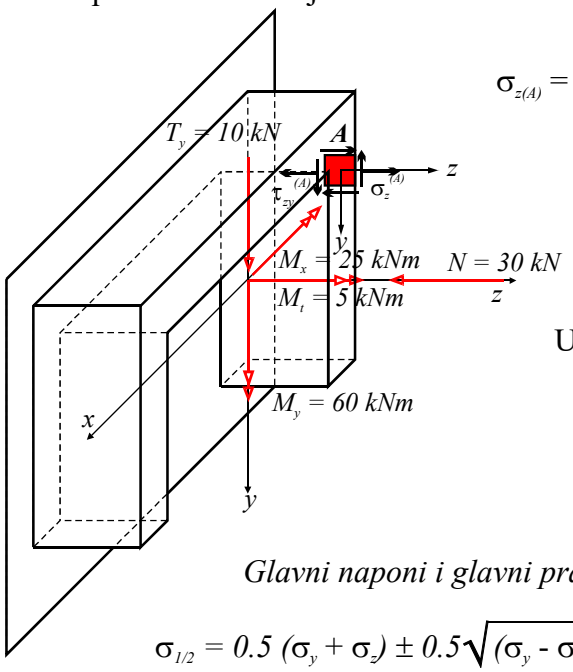

Normalni napon u tački A

$$\sigma_{z(A)} = \sigma_{z(A)}^{(Mx)} + \sigma_{z(A)}^{(My)} + \sigma_{z(A)}^{(N)} = 0 + 3.363 - 0.165$$

$$\sigma_{z(A)} = 3.198\ kN/cm^2$$

Tangencijalni napon u tački A

$$\tau_{zy}^{(A)} = \tau_{zy(Ty)}^{(A)} + \tau_{zy(Mt)}^{(A)} = 0.156 - 2.483$$

$$\tau_{zy}^{(A)} = -2.327\ kN/cm^2$$

Ulazni podaci pri analizi napona u tački A

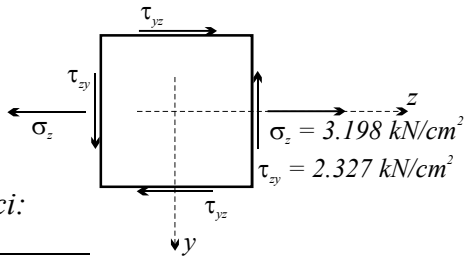

Glavni naponi i glavni pravci:

$$\sigma_{1/2} = 0.5\,(\sigma_y + \sigma_z) \pm 0.5\sqrt{(\sigma_y - \sigma_z)^2 + 4\tau_{yz}^2}$$

$$\sigma_{1/2} = 0.5(0 + 3.198) \pm 0.5\sqrt{(0 - 3.198)^2 + 4\cdot(-2.327)^2} = 1.599 \pm 2.823$$

$$\sigma_1 = 4.422\ kN/cm^2$$
$$\sigma_2 = -1.224\ kN/cm^2$$

Pravci glavnih napona definisani su uglom α:

$$tg2\alpha = \frac{2\tau_{yz}}{\sigma_y - \sigma_z} = \frac{2\cdot(-2.327)}{0 - 3.198} = 1.455$$

$$\textbf{za } (\sigma_y - \sigma_z) < 0 \qquad \alpha = 0.5arctg\left(\frac{2\tau_{yz}}{\sigma_y - \sigma_z}\right) + 90^o$$

$$\alpha = 0.5arctg\,(1.455) + 90^o = 117.75^o$$

Napregnuti element u sistemu glavnih osa

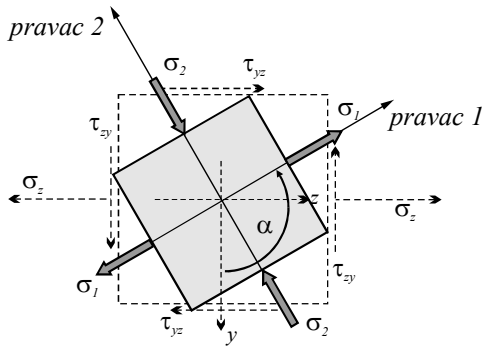

Tenzor napona

$$[S] = \begin{bmatrix} \sigma_x & \tau_{xy} & \tau_{xz} \\ \tau_{yx} & \sigma_y & \tau_{yz} \\ \tau_{zx} & \tau_{zy} & \sigma_z \end{bmatrix} = \begin{bmatrix} 0 & 0 & 0 \\ 0 & \sigma_y & \tau_{yz} \\ 0 & \tau_{yx} & \sigma_z \end{bmatrix} \qquad [S] = \begin{bmatrix} \sigma_y & \tau_{yz} \\ \tau_{yx} & \sigma_z \end{bmatrix} = \begin{bmatrix} 0 & -2.327 \\ -2.327 & 3.198 \end{bmatrix} \ [kN/cm^2]$$

Tenzor deformacije

$$E = 20\ GPa = 20\cdot 10^2\ kNcm^2 \qquad G = \frac{E}{2(1+\nu)} = \frac{20}{2(1+0.3)} = 7.6923\ GPa$$

$$\nu = 0.3$$

$$\varepsilon_x = [\sigma_x - \nu(\sigma_y + \sigma_z)]/E = \frac{1}{20\cdot 10^2}[0 - 0.3\,(0 + 3.198)] = -4.797\cdot 10^{-4}$$

$$\varepsilon_y = [\sigma_y - \nu(\sigma_x + \sigma_z)]/E = \frac{1}{20\cdot 10^2}[0 - 0.3\,(0 + 3.198)] = -4.797\cdot 10^{-4}$$

$$\varepsilon_z = [\sigma_z - \nu(\sigma_x + \sigma_y)]/E = \frac{1}{20\cdot 10^2}[3.198 - 0.3\,(0 - 0)] = 15.99\cdot 10^{-4}$$

$$\gamma_{xy} = \tau_{xy}/G = 0$$

$$\gamma_{yz} = \tau_{yz}/G = \frac{-2.327}{7.6923\cdot 10^2} = -30.251\cdot 10^{-4}$$

$$\gamma_{zx} = \tau_{zx}/G = 0$$

tenzor deformacije

$$[D] = \begin{bmatrix} \varepsilon_x & \frac{1}{2}\gamma_{xy} & \frac{1}{2}\gamma_{xz} \\ \frac{1}{2}\gamma_{yx} & \varepsilon_y & \frac{1}{2}\gamma_{yz} \\ \frac{1}{2}\gamma_{zx} & \frac{1}{2}\gamma_{zy} & \varepsilon_z \end{bmatrix} = \begin{bmatrix} -4.797 & 0 & 0 \\ 0 & -4.797 & -\frac{1}{2}30.251 \\ 0 & -\frac{1}{2}30.251 & 15.99 \end{bmatrix} 10^{-4}$$

Glavne dilatacije je jednostavno odrediti preko glavnih napona ($\sigma_1 > \sigma_2 > \sigma_3$).

$\sigma_1 = 4.422\ kN/cm^2 \qquad \sigma_2 = 0 \qquad \sigma_3 = -1.224\ kN/cm^2$

$$\varepsilon_1 = [\sigma_1 - \nu(\sigma_2 + \sigma_3)]/E = \frac{1}{20 \cdot 10^2}\ [4.422 - 0.3\ (0 - 1.224)] = 23.946 \cdot 10^{-4}$$

$$\varepsilon_2 = [\sigma_2 - \nu(\sigma_1 + \sigma_3)]/E = \frac{1}{20 \cdot 10^2}\ [0 - 0.3\ (4.422 - 1.224)] = -4.797 \cdot 10^{-4}$$

$$\varepsilon_3 = [\sigma_3 - \nu(\sigma_1 + \sigma_2)]/E = \frac{1}{20 \cdot 10^2}\ [-1.224 - 0.3\ (4.422 - 0)] = -12.753 \cdot 10^{-4}$$

ZADATAK ZA VEŽBU

Za konzolni nosač kao na slici:
a/ odrediti vrednost opterećenja ***q*** *tako da vertikalno pomeranje težišta preseka B bude 1.75 mm,*
b/za tako dobijeno opterećenje nacrtati dijagrame presečnih sila (M, N, T),
c/ *za presek u uklještenju nacrtati dijagrame komponentalnih napona i analizirati stanje napona u tački G..*

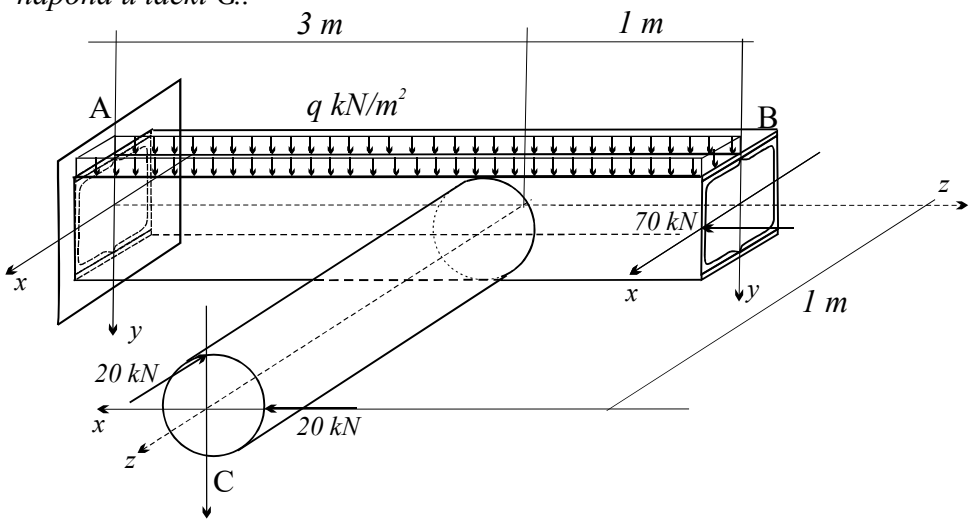

presek 2] 30

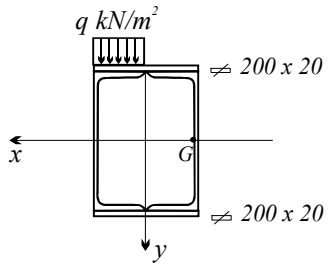

E = 200 GPa

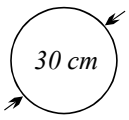

Priloženo je rešenje zadatka u skraćenom obliku

Univerzitet Crne Gore
GRAĐEVINSKI FAKULTET

INSTITUT ZA GRAĐEVINARSTVO
GRAĐEVINSKOG FAKULTETA U PODGORICI

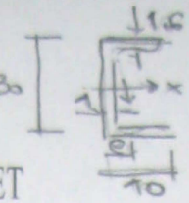

[30
e = 2,7 cm
I_x = 8030 cm⁴
I_y = 495 cm⁴
A = 58,8 cm²

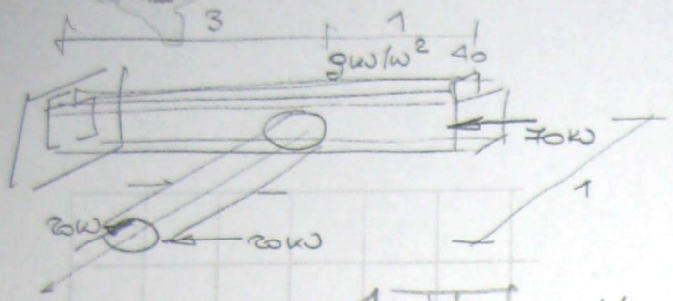

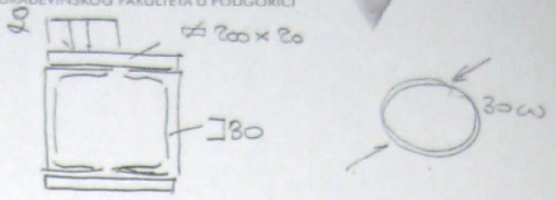

$I_x = 2\cdot 8030 + 2\left[\frac{1}{12}20\cdot 2^3 + 20\cdot 2\cdot 16^2\right] = 36566{,}6\ cm^4$

$E = 200\ GPa$

$EI = 200\cdot 10^3\cdot 36566{,}6 = 7{,}31\cdot 10^8\ kN/m^2 = 73133{,}3\ kNm^2$

$V_B = \frac{gl^4}{8EI} = \frac{4\cdot 4^4}{8\cdot 73133{,}3} = 0{,}00175\ m = 1{,}75\ mm$

$g = 0{,}1g$

KONTROLA

$\frac{0{,}1g\cdot 4^4\cdot 10^6}{8\cdot 200\cdot 10^3\cdot 36566{,}6} = 0{,}175$ $\quad g = 39{,}994\ kN/m^2 \approx 40\ kN/m^2$

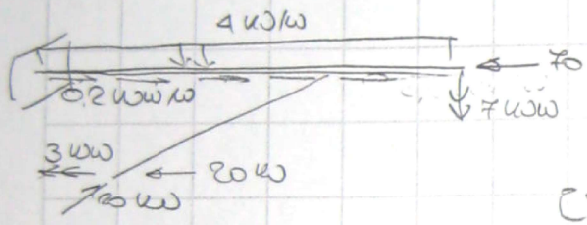

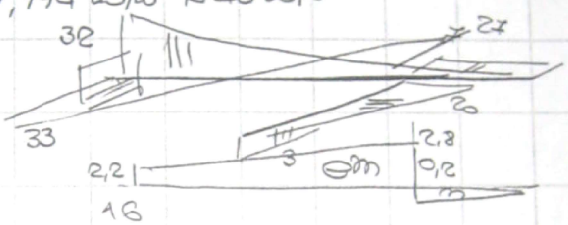

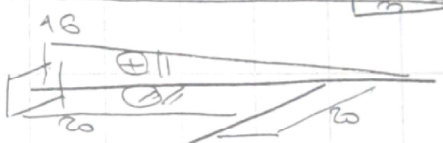

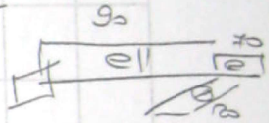

TEOR. KARAKT

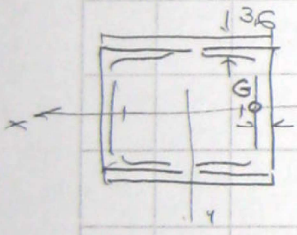

$A = 2\cdot 58{,}8 + 2\cdot 40 = 197{,}6 - 519{,}84$

$I_x = 36566{,}6\ cm^4$

$I_y = 2\cdot 495 + 2\cdot 58{,}8\cdot 7{,}3^2 + 2\frac{1}{12}2\cdot 20^3 = 9923{,}571\ cm^4$

$I_t = \frac{4(19\cdot 30{,}4)^2}{2\left(\frac{19}{3{,}6} + \frac{30{,}4}{1}\right)} = 18701{,}936\ cm^4$

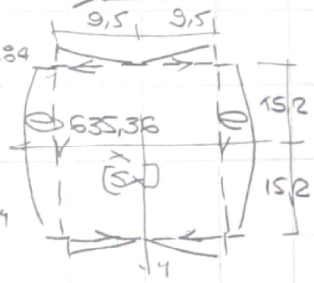

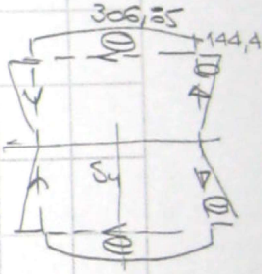

U = -30 kN

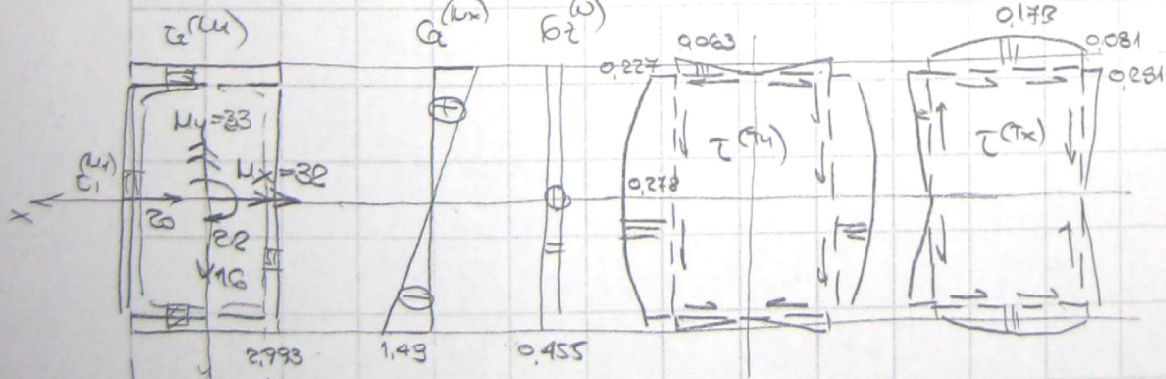

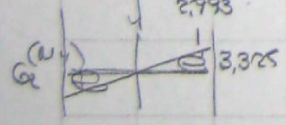

NAPONI

$\sigma_z^{(Mx)} = \pm\frac{32\cdot 10^3}{36566{,}6}\cdot 17 = \pm 1{,}49$

$\sigma_z^{(My)} = \pm\frac{33\cdot 10^3}{9923{,}571}\cdot 10 = \pm 3{,}32$

$\sigma_z^{(\omega)} = -\frac{90}{197{,}6} = -0{,}455$

$\tau_1^{(M_1)} = \frac{2{,}2\cdot 10^2}{2(19\cdot 30{,}4)1} = 0{,}19\ kN/m^2$

$\tau_2^{(M_1)} = \frac{2{,}2\cdot 10^2}{2(19{,}30{,}4\cdot 3{,}6} = 0{,}053\ kN/m^2$

$\tau^{(Ty)} = -\frac{16\ S_x}{6\ 36566{,}6} = -0{,}000432$

$\tau_1 = \sqrt{\frac{(-519{,}84)}{3{,}6}} = 0{,}063\ kN/m^2$

$\tau_1' = \sqrt{\frac{(-519{,}84)}{1}} = 0{,}227\ kN/m^2$

$\tau_2 = \sqrt{\frac{(-635{,}36)}{1}} = 0{,}278\ kN/m^2$

TAČKA G

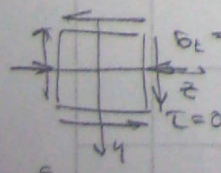

$\tau^{(Tx)} = -\frac{(-20)\ S_y}{6\ 9923{,}571} = +0{,}002015\frac{S_y}{b}$

$\tau_1^{(Tx)} = \sqrt{\frac{(-144{,}4)}{1}} = -0{,}231\ kN/m^2$

$\tau_1' = \sqrt{\frac{(-144{,}4)}{3{,}6}} = -0{,}0806\ kN/m^2$

$\tau_2 = \sqrt{\frac{(-306{,}85)}{3{,}6}} = -0{,}172\ kN/m^2$

$\sigma_z^G = -2{,}993 - 0{,}455 = -3{,}448$

$\tau = 0{,}19 + 0{,}278 = 0{,}468$

Podgorica, Cetinjski put bb, tel. 081 244905, 245014; fax: 081 241903; www.gf.cg.ac.yu; e-mail: gf@cg.ac.yu

GEOMETRIJSKE KARAKTERISTIKE SLOŽENIH ČELIČNIH PRESEKA

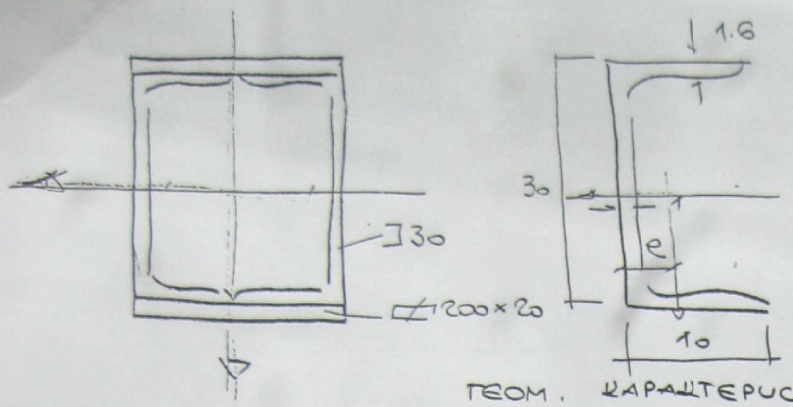

$e = 2.7\ cm$
$A = 58.8\ cm^2$
$I_x = 8030\ cm^4$
$I_y = 495\ cm^4$

TEOM. KARAKTERISTIKE

$$I_x = 2\cdot 8030 + 2\left(\frac{1}{12}20\cdot 2^3 + 40\cdot 16^2\right) = 36\,566{,}6\ cm^4$$

$$I_y = 2\left(495 + 58.8\cdot 7{,}3^2\right) + 2\,\frac{1}{12}\,2\cdot 20^3 = 9523.57\ cm^4$$

SREDNJA LINIJA

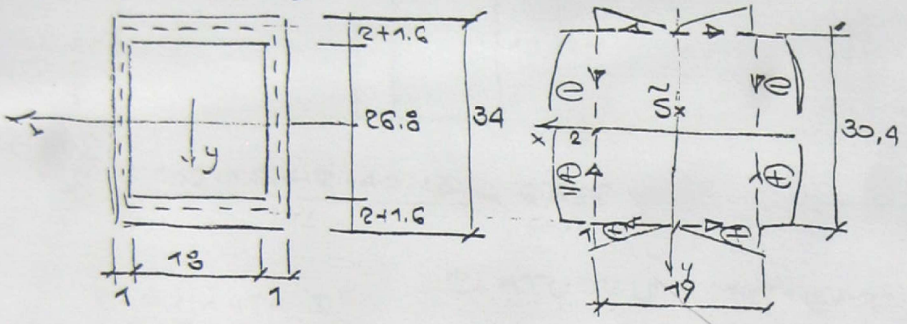

$$I_t = \frac{2A_s^2}{\sum \frac{l_i}{t_i}} = \frac{2(19\cdot 30{,}4)^2}{2\left(\frac{19}{3{,}6} + \frac{30{,}4}{1}\right)} = \dots$$

$[S_x]_1 = 9{,}5\cdot 3{,}6\cdot 15{,}2 = 519{,}84\ cm^3$

$[S_x]_2 = 519{,}84 + 1\cdot 15{,}2\cdot\frac{15.2}{2} = 635{,}36\ cm^3$

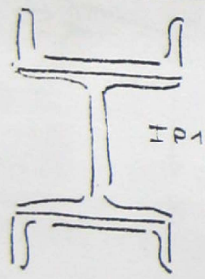

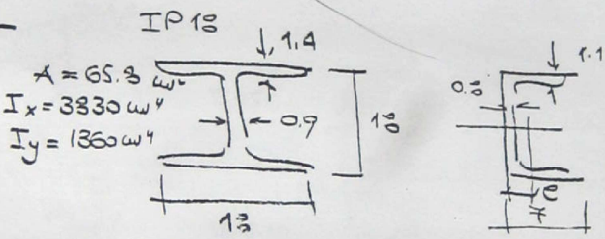

$A = 65.8\ cm^2$
$I_x = 3830\ cm^4$
$I_y = 1360\ cm^4$

$A = 28\ cm^2$
$e = 1.92\ cm$
$I_x = 1350\ cm^4$
$I_y = 114\ cm^4$

$$I_x = 3830 + 2\left(114 + 28\cdot 10.92^2\right) = 10\,735.8\ cm^4$$

$$I_y = 1360 + 2\cdot 1350 = 4060\ cm^4$$

SREDNJA LINIJA

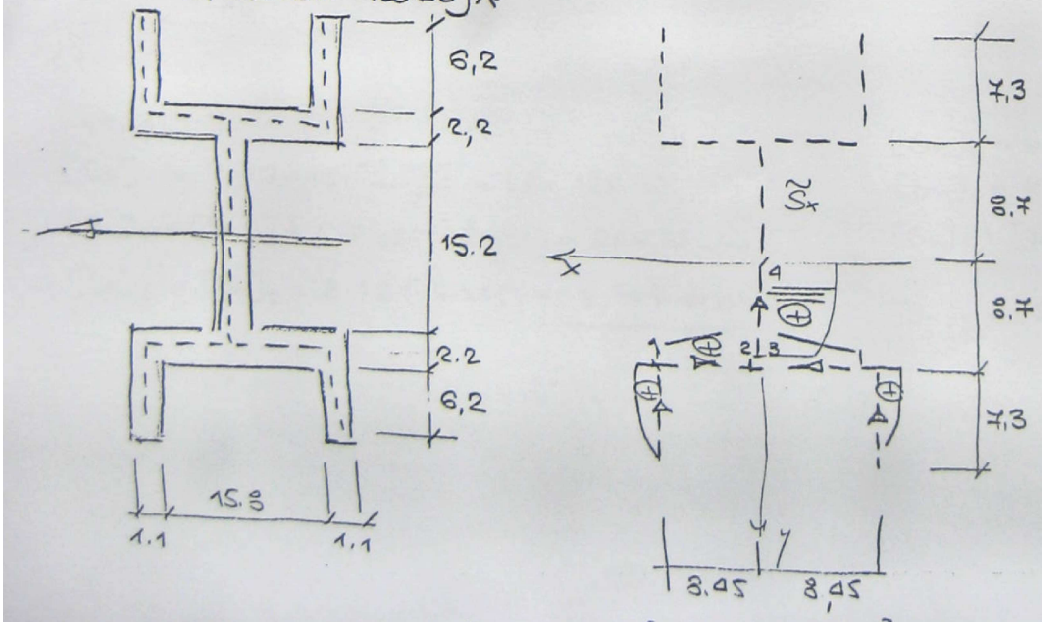

$[S_x]_1 = 7.3\cdot 1.1\cdot\left(8{,}7 + \frac{7{,}3}{2}\right) = 99{,}1705\ cm^3$

$[S_x]_2 = 99{,}1705 + 8{,}45\cdot 2{,}2\cdot 8{,}7 = 260{,}503\ cm^3$

$[S_x]_3 = 2[S_x]_2 = 521{,}007\ cm^3$

$[S_x]_4 = 521.007 + 0.9\,\frac{8{,}7^2}{2} = 555{,}367\ cm^3$

$$I_t = \frac{1}{3}\left[4\cdot 7{,}3\cdot 1{,}1^3 + 2\cdot 16{,}9\cdot 2{,}2^3 + 17.4\cdot 0{,}8^3\right] = 137{,}15\ cm^4$$